Electrical diagram

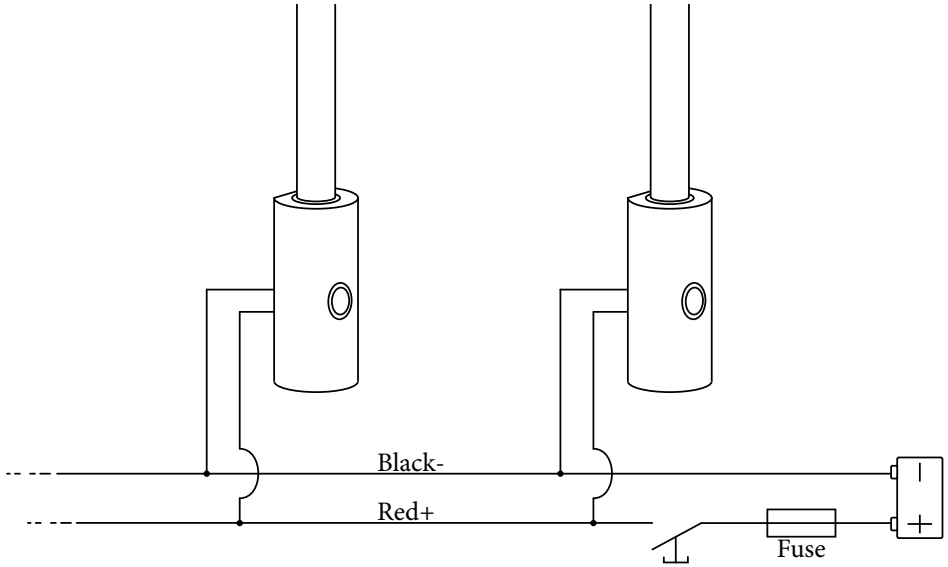

On / Off Touch switch
Hold for dimming

Dimming function remembers your last setting after being turned off

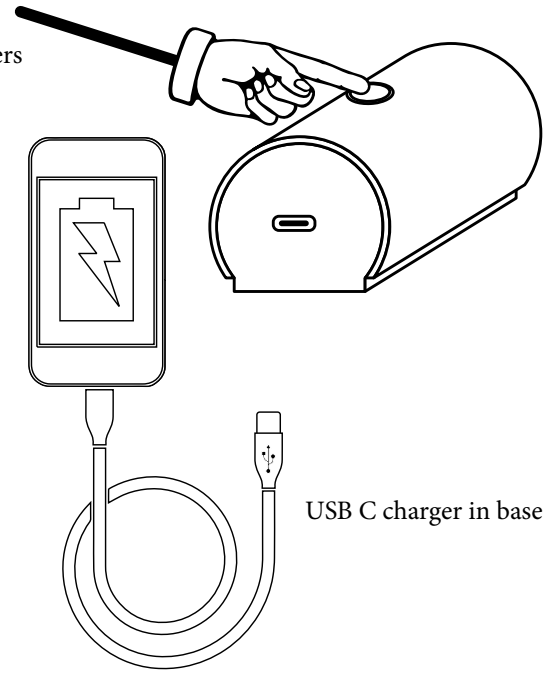

USB C charger in base

www.casolux.com

June 2025

CASOLUX®
The lights of tomorrow

MARTHA-CB

Courtesy Light

Assembly instruction

Item	Power	Input
MARTHA-CB	1,8w	9-32V DC

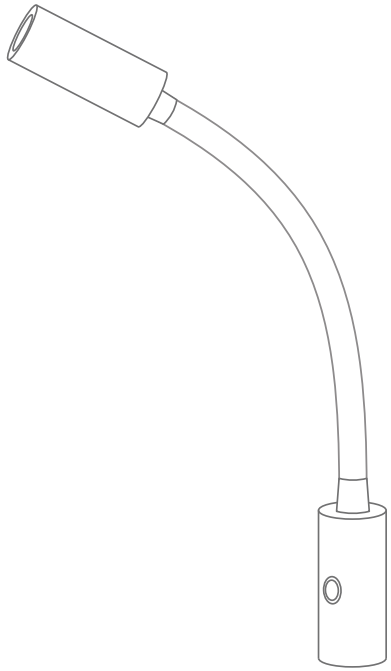

Casolux Aps
Borrevej 18, 6400 Sønderborg
Phone: +45 7445 0005
www.casolux.com

BEFORE YOU START

Safety information

Read all safety information before using the device to ensure safe and proper use.

The light source of this light fixture is not replaceable, when the light source reaches its end of life the whole unit shall be replaced.

It is extremely important that these instructions are read carefully, and any illustrations studied before commencing installation.

Please keep these instructions for future reference.

WARNING!

-Electricity can be dangerous.

-Do not attempt to fit installation unless you are competent.

-If in any doubt consult a qualified electrician to complete electrical installation.

-Installation to comply with current IET wiring regulations.

-If you find any damage to the electrical parts, please ask a qualified electrician.

-Be aware of electrical voltage on the different models to avoid damage.

Correct disposal

This marking indicates that this item should be disposed of separately from household waste. The item should be handed in for recycling in accordance with local environmental regulations for waste disposal.

Cleaning Instructions and Care

-Please disconnect the light before cleaning.

-Take extra care when cleaning and assembling.

-Do not use any chemical or abrasive solutions.

Installation

-Take care when handling and installing to avoid damage to the product.

-Avoid mounting the fitting on a damp surface such as newly painted or plastered area as this could cause discoloration of the finish.

General Assembly

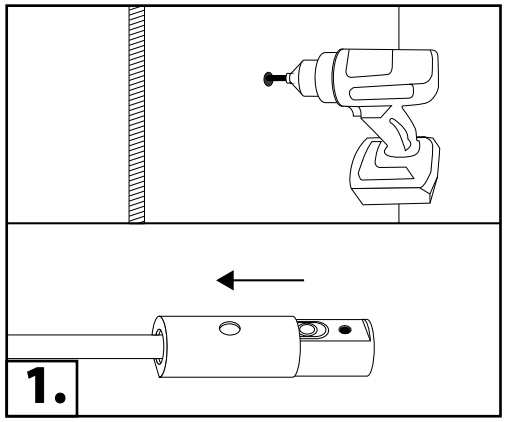

Drill a hole for routing the cables through.

Slide up the cover from the base.

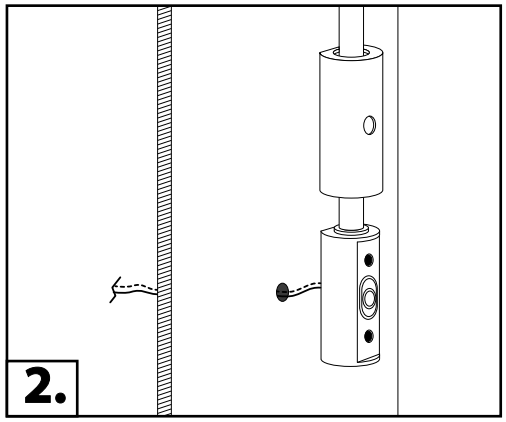

Route the cables from the light through the hole.

Then connect the light according to the electrical diagram.

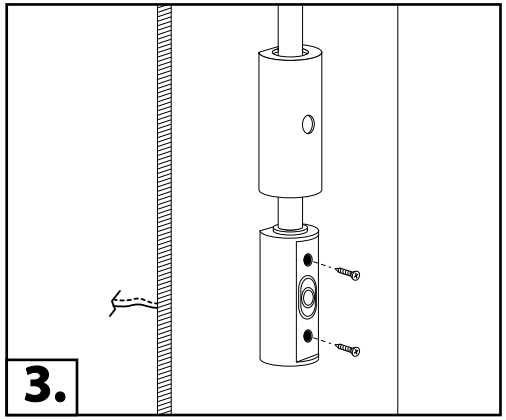

Screw in the light with the included screws to finish installation.

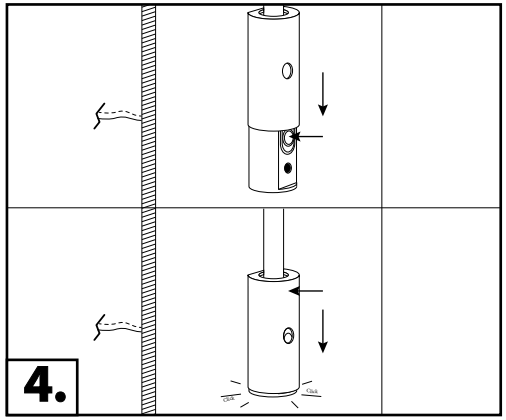

To finish installation:

1. Push in the retaining device and slide down the cover.

2. When the cover stops, push the top of the cover towards the wall and slide down the cover to finish.